BKN - 511895 - LATIGUILLO HONDA
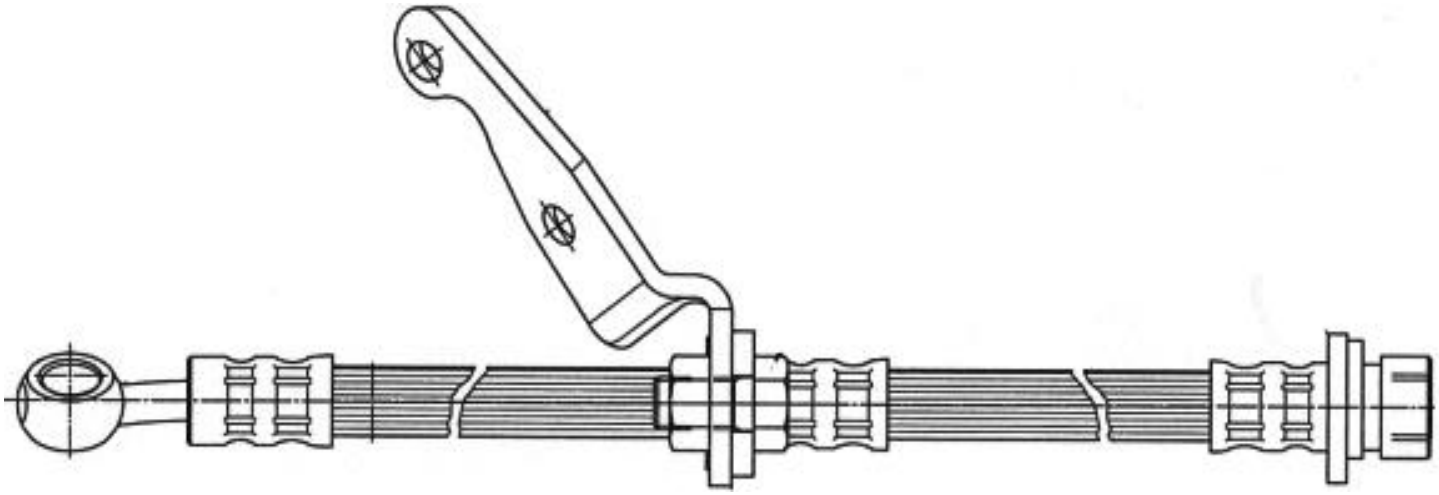
CR-V I (RD) | 10.95-02.02